WARCI News

Wisconsin Antique Radio Club, Inc.

Summer **July 2011**

Restoring a Philco 118,
by Brian Belanger — See Page 7

Figure 1 - The 1935 Philco Model 118 is an attractive tombstone.

The Yar True-Tone Speaker,
by Greg Hunolt — See Page 12

Figure 1 - Yar True-Tone Speaker, front and side view

Next WARCI Meet:

	Sunday, July 17; 8:00 – 12:00 Noon Outdoor (Indoor); Doors open 7:00AM
	The Terminal, 5917 S. Howell Ave., Milwaukee (near the Airport)
	Features: News Meeting, Show-and-Tell, Donation Auction, 50-50 Raffle, and Free Pizza Lunch

Inside This Issue...

WARCI, Inc.

The Wisconsin Antique Radio Club, Inc. exists to preserve the knowledge of radio, television, and other related disciplines. We have a special interest in the history of radio in Wisconsin, Wisconsin radio companies, radio stations, etc. Our members' interests include radio, television, audio, and antique phonographs.

Officers and Board

President - Greg Hunolt
ghunolt@excel.net
920-893-0422

Vice President – Bill Engaas
craftyradio@earthlink.net
262-786-8183

Treasurer – Terry Hanney

Secretary - Ralph Larsen

Board - Bob Paquette, Dennis Schrank, Dale Boyce

WARCI News Editor – Greg Hunolt

WARCI Website – Nick Tillich
webmaster@warci.org

WARCI Information

WARCI is incorporated in the State of Wisconsin.

Annual membership dues are $15 for each calendar year, January – December.

Seller's fee at Swap Meets is $7.00 for members, $10 for non-members.

Swap Meets are held at The Terminal, 5917 S. Howell Avenue, Milwaukee WI (near airport).

The next swap meet date is Sunday, July 17. Swap meet times are 8:00AM – 12:00 Noon. Doors open at 7:00AM for set-up.

WARCI News

This newsletter is the official publication of the Wisconsin Antique Radio Club, Inc. It is published four times per year, in January, May, July and September. The WARCI news is free to all club members.

Articles or material for the newsletter are most welcome and should be sent to Greg Hunolt, ghunolt@excel.net or N5412 State Hwy 57, Plymouth WI 53073. Include your name, address, phone, and email. PC format (e.g. MS Word) by email is preferred. JPEG for images is preferred. Please contact Greg Hunolt for assistance.

Classified ads up to ¼ page are free to WARCI members

The cut-off date for all newsletter material is about the fifteenth of the month preceding publication of the next newsletter (e.g. June 15, 2011, for the July issue).

WARCI Website

www.warci.org

The WARCI website features information about WARCI activities, Wisconsin radio, articles, etc. Contributions are most welcome! Contact our webmaster Nick Tillich, at webmaster@warci.org . Thank you, Nick, for your great work.

WARCI Headlines

May 8 Meet

We had a light turnout at the meet, with just 10 sellers, with so-so overall attendance. It will, however, be our last Mothers' Day meet! Our first Show-and-Tell was well received, and we'll make it a regular feature going forward. The Donation Auction returned, 21 items bringing in $159 for the club. The 50-50 Raffle was successful, bringing in $23 to the club. Once again, a highlight of the meet was the excellent pizza cooked and served by Joe Halser and his staff at the Terminal.

Membership Update

Last year, 2010, we had 46 active, paid members. So far this year, we have 42 active paid members, including 3 new members and 39 returning members, but there are another 8 members who were active last year but have not renewed yet, for a potential total of 50 if everyone renews their membership.

July 17 Meet

For July we will continue the same 8:00 AM "official" flea market start time (doors open at 7:00 AM). We will have a short club meeting at 10:00 AM, followed by the Show-and Tell, Donation Auction, the 50-50 Raffle Drawing and free pizza after the raffle drawing, so about 11:00 AM.

Donation Auction Rules

After an incident at the last meet, we need to clarify the rules for the Donation Auction. We will have an area marked off for donated items. Once you place an item in that area, it is donated to the club and becomes the property of the club, and will be auctioned or disposed of if it does not sell at the auction. No one may remove a donated item from the donation area prior to the auction. So, while we very much appreciate your donations, please don't make place an item in the donation auction until you're sure you want to donate it. Or, if you see an item of interest in the donation area, don't ask the donor to reclaim it—the item no longer belongs to the donor.

September Auction is a Go: Draft Rules

The auction committee (Jim Menning, Dale Boyce, Bill Engaas and Greg Hunolt) met on June 25. We intend to proceed with our first auction at the September 18 meet. We see this auction as a "shakedown" for our procedures and a test of the potential interest in an annual WARCI auction.

We have a draft set of rules and procedures that we will present to the membership at the July meet, see what folks think, make tweaks, and finalize them.

High points of the draft auction rules:

1. We will charge sellers a $5 per lot fee, up to 5 lots allowed. There will be no other seller or buyer commission. There will be a $1 charge for a bidders card for persons only buying; persons selling will receive a bidders card without an additional charge.
2. Sellers will be able to place a reserve value on each lot. Lots with a reserve will not be sold for less than the reserve amount without the seller's consent. If the high bid falls short of the reserve amount, the high bidder will be given the opportunity to meet the reserve. If the high bidder declines, the seller will be given the opportunity to accept the high bid.
3. There will be a minimum bid of $10 (unless the item is a donation to WARCI). An item failing to get the minimum bid is a no-sale.
4. Sellers may not bid on their own lots.
5. Payment by buyers will be by cash, or check if pre-approved by a WARCI official at check-in.
6. Payment to sellers will be by cash or check at WARCI's option.
7. All items will be sold as-is, where-is, without any guarantee implied or expressed by the seller, or WARCI.
8. Items that do not sell and are not claimed by the consigner, or that are sold but are not claimed by the buyer, become WARCI property to be disposed of as WARCI sees fit.

Items Needed for the Auction

WARCI members are encouraged to commit items to the auction. Items that are committed by August15 will be advertised in the September issue of WARCI News and on the website. If you commit to bringing an item to the auction and we advertise it, <u>it is vital that you follow through and have the item in the auction; otherwise our credibility will be shot.</u>

The Armstrong Regenerative Patent,

By Steve Raymer

This article is reprinted with a few minor changes from the December, 2010 edition of the newsletter of the Pavek Museum of Broadcasting in St. Louis Park (a suburb of Minneapolis) Minnesota (a must to visit), with the kind permission of Steve Raymer, director of the museum and author.

The dominant property at the dawn of the Broadcast Era was Edwin Howard Armstrong's 1914 "Wireless Receiving System" patent number 1,113,149, commonly known as the Armstrong regenerative patent. It turned a barely-adequate single-tube receiver into a world-beater, dramatically improving both sensitivity and selectivity.

The December 2010 issue of the Pavek Museum of Broadcasting newsletter identified a distinct set of companies who were manufacturing wireless equipment before, during, and after WWI. This group included Adams-Morgan, AMRAD, Clapp-Eastham, De Forest, Federal Telephone and Telegraph, General Electric, Grebe, Murdock, Western Electric, Westinghouse, and Wireless Specialty Apparatus (owned by United Fruit). The smaller companies within the group who had the foresight to purchase rights to use Armstrong's regenerative patent for the short time that it was available in 1920 held a distinct advantage over those who did not. The four largest companies, G. E., Westinghouse, United Fruit, and Western Electric eventually became "partners" in the newly formed RCA, controlling all of Armstrong's pre-1920 patents.

Although the familiar regenerative circuit looks like figure 1 below, Armstrong's original designs were considerably different.

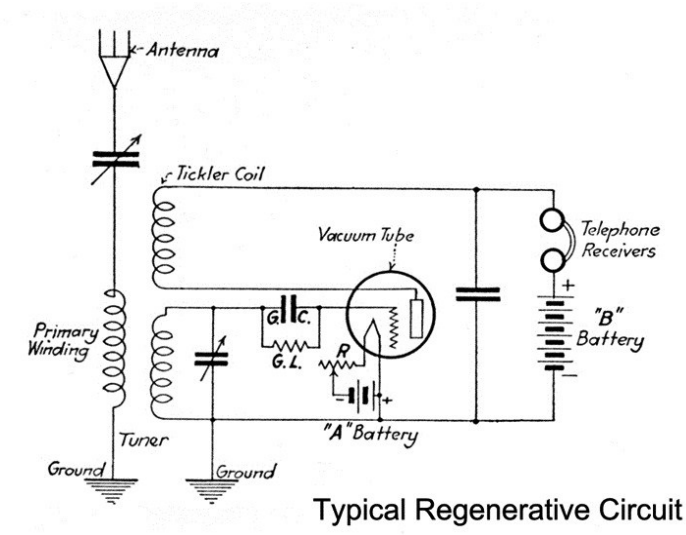

Figure 1 - Typical Regenerative Circuit

His 1913 patent application had six different drawings, none of which had a plate circuit coil inductively-coupled to the grid coil, and interestingly, none had a D.C. path to ground from the grid. The lack of a D.C. grid return caused a myriad of instability and hum problems. Neither Armstrong nor Lee de Forest was able to solve the mystery of grid-bias. That was left to the genius of Fritz Lowenstein, who applied for his "C-Bias" patent in 1912, but didn't receive it until 1917. In the meantime, Armstrong's designs were captives of the still untamed Audion.

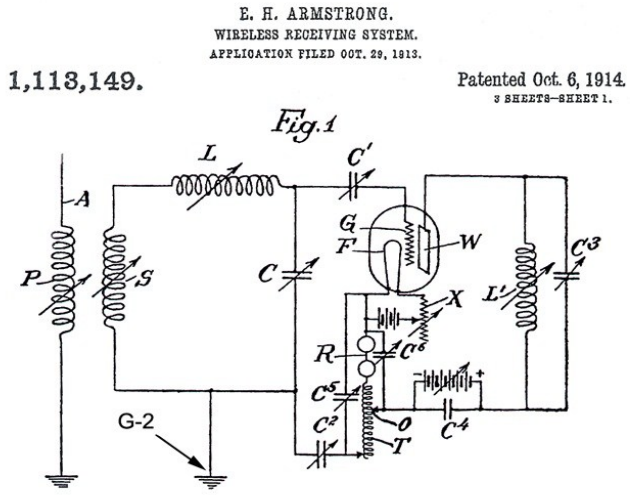

Figure 2 - The Armstrong Patent, Figure 1

The drawing in figure 2 above is the first of six in the patent application. Whatever his intention, it's clear that Armstrong was building an oscillator here. He set up resonance in virtually every component; even the inductance of the headphones (R) played a role; how he applied it determined the function of this circuit. The transfer of energy from the plate circuit back to the grid circuit occurs at point "O" on this schematic. The sole purpose of the ground connection at "G-2" is an attempt to stabilize the tube.

The arrangement of the coils in Figure 3 of the patent application (figure 3 on the next page) is virtually identical to those of the 1916 Adams-Morgan Paragon RA-6 and nearly the same as Grebe's 1920 CR-3 (figure 4).

Armstrong Patent - continued on Page 5

Armstrong Patent - continued from Page 4

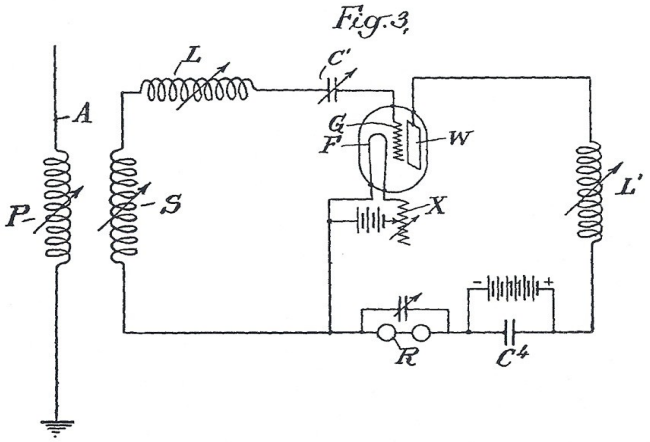

Figure 3 above - The third figure from the Armstrong Patent, and Figure 4 below - Grebe CR-3 Schematic

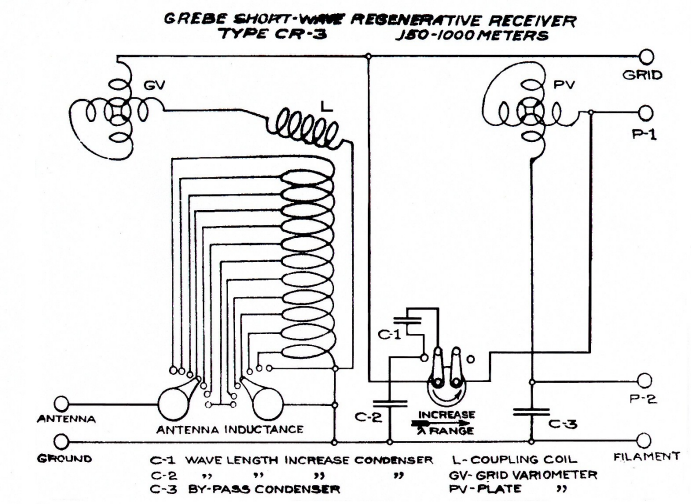

Alan Douglas notes that "By 1920 Howard Armstrong's legal expenses were mounting, while he waited for one of the large electrical or wireless companies to make an offer for his regeneration and superheterodyne patents and applications. His attorneys hit on the idea of licensing the myriad makers of regenerative receivers for the amateur market, under his patent 1,113,149 (1914), for a royalty of 5% of sales price, and were soon signing them up as fast as they could spot their magazine ads. Since the ham market was considered negligibly small, issuing these licenses would not endanger the eventual sale of the patents to commercial interests.

The companies licensed are listed in the table to the right, more or less in the order shown. All of these companies, but the first two, were small; indeed, some were nothing more than high-school boys working in their attics."[1] It soon became apparent that their Armstrong patent rights were, for many of them, their greatest asset.

After Westinghouse purchased Armstrong's regenerative and superheterodyne patents in November of 1920, licenses were no longer available. Westinghouse joined the RCA monopoly and opportunities seemingly evaporated for the small manufacturer until, as providence would have it, the need for neutralization in early vacuum tubes, and RCA's refusal to bargain with Hazeltine (the holder of neutralization patents) forced the doors of opportunity wide open, once again, for another group of small American radio companies who joined forces to form the Independent Radio Manufacturers and purchase the rights to build Neutrodyne receivers.

Ironically, Penne and Davis, the attorneys who signed as witnesses to Armstrong's 1913 application were principals of the law firm that represented the Hazeltine Corporation in its successful campaign against RCA and frankly, anyone else who dared use any form of neutralization without a Hazeltine license.

As basic receiver design advanced and the cost of vacuum tubes came down, regenerative radios became less important, especially after 1924, when most manufacturers focused their energies on five-tube TRF (tuned radio frequency) sets. Edwin Howard Armstrong went on to create the superheterodyne and super-regenerative circuits as well as the FM (frequency modulation) system of transmission and reception. (30)

[1]Radio Manufacturers of the 1920's, Alan Douglas, vol I, pg vi.

Companies That Purchased Regenerative Licenses
American Marconi (only for 1 or 2 stations
International Radio Telegraph Company
Adams-Morgan Company
Clapp-Eastham (4/18/20)
A.H. Grebe Co. (4/30/20)
Chicago Radio Labs (5/15/20, became Zenith in 1923
Precision Equipment (later purchased by Crosley)
Cutting & Washington (7/7/20, became Colonial in 1924)
Jones Radio (affiliated with Kellogg)
Mignon
Tri-City Electric (manufactured radios for Montgomery Ward and others)
Klitzen (affiliated with Michigan Radio Corp.)
The Radio Shop
Oard Radio Laboratories
Pennsylvania Wireless
The C.D. Tuska Co.
Radio-Craft (later purchased by De Forest)
Colin B. Kennedy
Eastern Radio Co.
Chelsea Radio

Editor's Note:

The WARCI News is your newsletter.

Your comments and suggestions for the newsletter are most welcome.

Your contributions of articles or other material are urgently needed. Your help is needed to make the WARCI News a success and to ensure that it covers the full scope of the interests of WARCI members.

If you're not seeing articles on topics you are interested in, *write one*.

You may submit complete articles, but information from which an article can be developed is also welcome.

Don't agonize over format, etc., as I will have to adapt your submission to the newsletter anyhow. Simple text is best. PC format (e.g. MS Word, separate jpegs by email) is preferred, but hardcopy text and photos are accepted.

In this issue we feature an article by Brian Belanger, reprinted with permission from Radio Age, the newsletter of the Mid-Atlantic Antique Radio Club, on restoration of a Philco tombstone set. We've gotten requests for restoration articles, and until you start writing them I will try to find good ones to carry.

We also have an article by Steve Raymer, director of the Pavek Museum of Broadcasting in Minneapolis, reprinted with permission from their newsletter. It discusses the Armstrong regeneration patent.

Our series of articles on Wisconsin radio companies and Wisconsin radio history continues with a follow -up to the May article on the Super-Ball Antenna Company of Green Bay, this one on the Yar True-Tone speaker designed by Bearl Colburn.

We congratulate WARCI member Glenn Trischan on the publication of his fine article on the Globe Electric Company of Milwaukee in the #25 AWA Review that just came out.

We will also cover tube audio and television and other member interests – but we need your contributions of articles or information for articles.

Thank you,
- Greg Hunolt, Editor, WARCI News

Renew Your WARCI Membership for 2011!

WARCI membership runs January to December, so it is well past time for you to renew for 2011!

If you're late, please complete the Membership Renewal form that you received with the January issue of WARCI News and bring it to the July meet or mail it, with $15, to Terry Hanney, 2501 S. 99th St., West Allis, WI 53227.

Bob Paquette's Microphone Museum

WARCI member Bob Paquette's Microphone Museum features his collection of well over 1,000 different makes and models of microphones as well as related pieces of equipment. The emphasis is on historically important microphones made between 1876 and 1950, and early radios, telephones, and many other communications devices, including an assortment of military gear.

You can see more photos and find out more about Bob's book "History and Evolution of the Microphone" at his website, http://www.sssmilwaukee.com/Microphone%20Museum.html

Bob always enjoys visitors and will be happy to give a guided tour to individuals or groups. You can call Bob at Select Sound (414) 645-1672 to arrange for your visit. Just ask for Bob Senior. The museum is located on the second floor of Select Sound, 107 E. National Avenue in Milwaukee. Enjoy your visit and allow yourself plenty of time.

Restoring a Philco 118

By Brian Belanger

This article is reprinted from the February, 2011 edition of Radio Age, the monthly newsletter of the Mid-Atlantic Antique Radio Club (MAARC) with the kind permission of Brian Belanger, Radio Age co-editor and author.

Restoring this eight-tube 1935 Philco Tombstone (see figure 1, page 1) involved several challenges. Of course there were all the usual chores such as cleaning and polishing the cabinet, installing new grille cloth, replacing the wax/paper and electrolytic capacitors, replacing the frayed line cord, putting a 2-amp cartridge fuse in series with the line cord to protect the power transformer in the event of a short circuit in the power supply, and replacing resistors that had changed in value enough to cause trouble.

I found that about 60-70 percent of the resistors in this chassis had increased in value substantially. When I first began working on antique radios about 30 years ago I seem to recall that the percentage of resistors that were seriously out of spec was smaller than what I have been finding more recently, but I suppose the passage of three decades is sufficient to account for the higher numbers we see today. (Perhaps years ago I was less likely to check resistor values as carefully as I do today.)

The most challenging aspect of this particular radio restoration turned out to be the band switch. (This radio has the AM broadcast band plus one shortwave band.) As shown in figure 2, the Philco band switch is a five-pole, single-throw (two-position) rotary switch. The original had all of its contacts on a single phenolic wafer. Unfortunately the fragile thin wafer was broken in two places in such a manner that gluing it back together looked hopeless. I looked in my junk box for wafer switches, but I did not have anything resembling a five-pole single-throw type. Wouldn't it be nice if we could just phone the local Philco distributor and ask him to send a new one? Not only are there no Philco distributors these days, there aren't even the local radio/TV parts suppliers that used to be reliable sources of generic replacement parts—for example, Capitol Radio here in suburban Maryland. Radio Daze, which is the best company around for antique radio parts, has some rotary switches, but not one like this.

Finding a replacement for an obscure band switch can be frustrating. Here's my shaggy dog story:

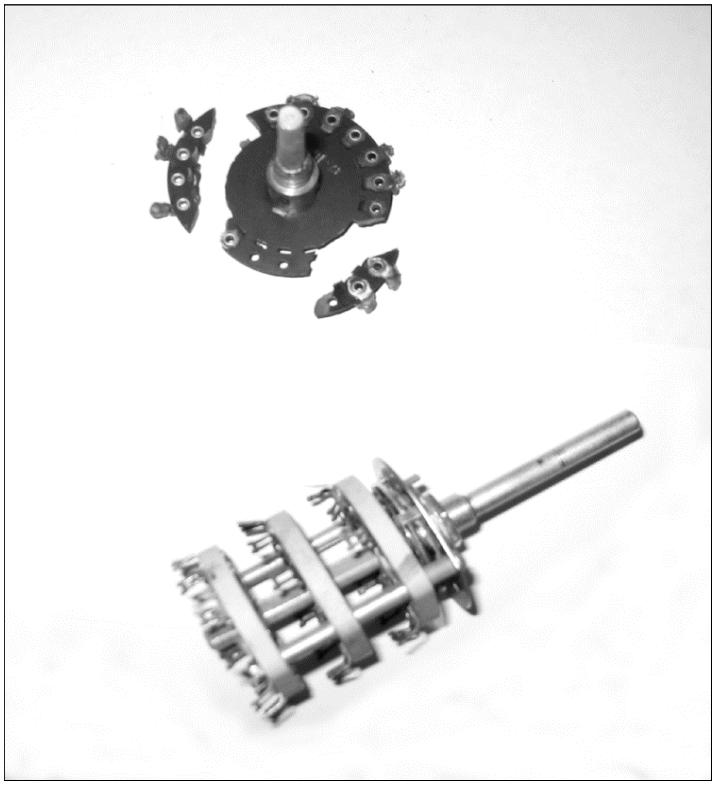

Figure 2 - The damaged original Philco phenolic wafer bandswitch (top), and the three-deck ceramic replacement that I cobbled up from my junk box.

Centralab was the company most famous for rotary switches years ago, so I did a quick search on the Internet to see whether Centralab was still in business. What used to be Centralab has been absorbed by Electroswitch Electronic Products in North Carolina. I found their website (www.electro-nc.com) and after a bit of searching, I located rotary switch number D6D0503N, which appeared that it could serve as a replacement for the Philco band switch. I called the Electroswitch toll-free order number and said I wanted to inquire about ordering one. "Well," the pleasant lady said, "we have a minimum order of 1,000 units." Since I had no use for 1,000 band switches, I asked whether there might be some vendor where I could buy just one. "Go to our website and click on Distributors," she said. There I found a list of companies such as Allied Electronics, Digi-Key, Mouser Electronics, and some

Restoring a Philco 118 - continued on Page 8

Restoring a Philco 118 - continued from Page 7

others that sold Electroswitch products. Phone calls disclosed that none of them had this particular switch in stock, so it would have to be a special order. Several of these companies had a minimum order of $50. Digi-Key offered to sell me just one for $37.95 plus shipping, with approximately a one-month wait.

Needless to say, I was discouraged. "Could I cobble up one from parts in my junk box?" I wondered. For anyone who intends to be a serious radio restorer, a well-stocked junk box is essential. I have heeded that advice, and over the years I have purchased at MAARC meetings numerous boxes of miscellaneous radio parts for bargain prices, as well as junker chassis from which parts can be scrounged. (One piece of advice, though—sort and organize the parts *as soon as you return from the flea market or auction*, otherwise you will never be able to find anything. I have a box for rotary switches, a box for toggle switches, a box for output transformers, a box for jacks and plugs, etc.) I found that I had about 15-20 new and used rotary switches. These can be disassembled, and the mix-and- match parts reassembled into new configurations. Experienced radio restorers are familiar with this process, but for the sake of any *Radio Age* readers who are newcomers to this hobby, let me explain what I did.

I began by disassembling the switches, looking for wafers with contacts that might work. Figure 3 below shows how these switches bolt together. They are available with wafers of a couple of different diameters as well as shafts of different cross-sections. I sorted the loose shafts and corresponding wafers into piles of compatible types, plus piles of spacers and other hardware. If you have ever played with an Erector Set, this brings back fond memories.

Note from the diagram in figure 3 (below left) that

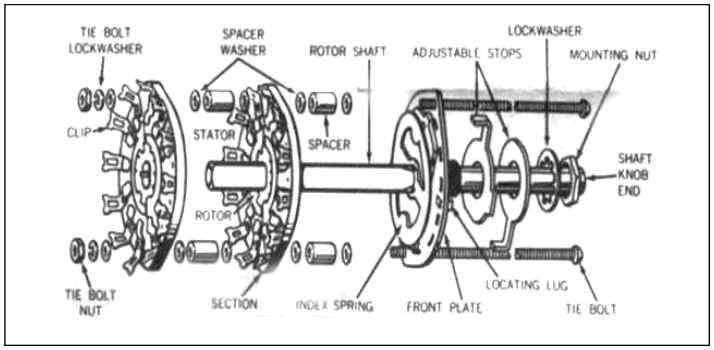

Figure 3- Centralab diagram showing the assembly of these rotary switches. Note the two adjustable stops. They determine the number of positions of the switch. In my case, I wanted two positions (one for the AM broadcast band and the other for the shortwave band).

underneath the big shaft nut these switches typically have two adjustable stops that can be removed and shifted to different positions so as to provide the desired number of stops or positions. The rotary switch shaft that I eventually used was originally set up for four positions, but by removing and reorienting the adjustable stops, I was able to arrange it for two clicks, corresponding to the broadcast band and the single shortwave band; see figure 4 below. This is a bit difficult to describe in words, but if you examine the illustrations on this page and take apart one of these switches yourself, you will see what I mean.

I could not find a single wafer with the right number and type of contacts, but I eventually found three wafers that could be assembled onto the shaft with spacers, and by orienting them properly, selecting the appropriate solder lugs, ignoring the ones not needed, and setting the stops for two positions corresponding to broadcast band and shortwave, I created a replacement band-switch that would work fine. Of course my three-wafer replacement was larger than the original single wafer switch, but fortunately, there was sufficient room in that area of the Philco chassis to accommodate it. I had to hacksaw off part of the round bandswitch shaft and file a flat on it to accommodate the Philco knob. I also had to place some spacer washers on the shaft, inside the chassis, to make it fit properly.

While everything above the chassis was kept original, underneath, it was a different story. A purist would argue that by using a replacement so radically different from the original, plus replacing so many caps and resistors with modern components, I was creating a radio that was a Philco in name only. That is a valid criticism, but once I had made a decision to restore the radio to working condition, there was no turning back. The new switch with its ceramic wafers was actually much better quality than Philco's original thin phenolic wafer. Mission accomplished!

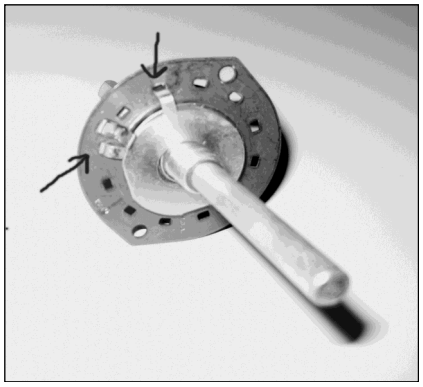

Figure 4 - Close-up showing the two adjustable stops. Holes around the wafer allow the user to set whatever number of stops you desire. In this case, I set the stops for two positions.

Restoring a Philco 118 - continued on Page 9

Restoring a Philco 118 - continued from Page 8

Figure 5 - Here's how I remove the old caps from Philco's Bakelite coffins in which they are interred. I bolt a metal strip to the housing, grasp it with a vise grip, and soften the tar with a heat gun.

Figure 6 - When the tar is soft, I pry out the old cap with the tip of a sturdy sharp knife.

When one restores a Philco of this vintage, one chore is rebuilding the Bakelite block units that hold capacitors potted in tar. (Sometimes these have resistors in the potting as well.) There are various schools of thought about how to rebuild them. Some recommend putting it into the freezer for a few days and then chipping at the frozen tar with a chisel, like a sculptor. Another approach is to plunge the unit into a pan of boiling water and melt out the tar. Personally, (as shown in figures 5 and 6 above) I like to bolt a metal strip to the capacitor housing, grasp the strip with vise-grips, clip off the leads to the solder lugs on top, play a heat gun on the unit, soften the tar, and pry out the capacitors with a narrow knife point. Be sure to pry out the old caps by leveraging against the solid end where the bolt hole is. The sides of the Bakelite block are thin and fragile, and if you pry against the side, it will break. (I know—I have broken some.)

If you work on vintage Philcos, there is a book you *must* have: *Philco Condensers and More* by Ray Bintliff. This invaluable book is available from *Antique Radio Classified* and other antique radio book suppliers. It describes the potted Philco capacitors and tone controls, with detailed data on the various part numbers as well as information about rebuilding the units. A briefer discussion of these capacitors can be found on page 13 of the August 1993 *MAARC Newsletter*.

I don't bother to re-pot the capacitors. When the Bakelite blocks are reattached to the chassis, the capacitors do not show, even from the underside of the chassis.

The three-gang tuning capacitor was frozen when I began the restoration. (The Rider manual indicates that there was another version of the Model 118 that had a four-gang tuning capacitor.) I drew a diagram of where all the wires went, unsoldered them, and removed the capacitor from the chassis. I blew out the considerable dirt and ran some soapy water through the plates, using a pipe cleaner and toothbrush to dislodge the crud.

After rinsing and drying the tuning capacitor I sprayed the wiper contacts with De-Oxit and squirted some light machine oil into the bearings. Slowly I worked the shaft back and forth and eventually it moved freely. The rubber grommets where the mounting screws fed through the chassis to hold the capacitor had crumbled, but fortunately I had some similar ones in my junk box that did the job. The dial scale was covered with dirt such that it was nearly opaque to the light from the pilot lamp. Some 0000 steel wool and Go-Jo removed that grime, and the dial scale looked fine. (Be careful, because some dial scales have ink that dissolves in water when you try to clean them, but this one was OK. By the way, Radio Daze offers replacement dial scales for this and many other radios.)

Rider Volume 5 includes alignment instructions for this model. This Philco has a wavetrap (parallel resonant circuit) in the antenna lead that can be tuned to reject interference. In the 1930s there were some powerful radiotelegraph stations operating at frequencies below the broadcast band, and so the wavetrap was included to ensure that any such station transmitting at a frequency near that of the 260 kHz IF did not create interference. Today that is very unlikely to be a problem, but in any case, the wavetrap is adjusted to reject signals at the IF frequency of 260 kHz.

In doing the alignment, you need a special Philco tool to adjust the IF transformers. One trimmer cap is adjusted with the screw in the center, the other, with the nut around that screw. Philco provided its dealers with a plastic cylindrical alignment tool for this purpose. Fortunately, I have one that I found in a box of parts purchased at a MAARC meeting years ago.

Restoring a Philco 118 - continued on Page 10

Restoring a Philco 118 - continued from Page 9

This Philco also includes a "Shadowgraph" tuning indicator. Philco never used Magic Eye tubes for tuning (they were too closely associated with RCA, Philco's competitor). The Shadowgraphs worked just as well and served the same purpose. The Shadowgraph was basically just a DC current meter with a moving vane situated in a beam of light from a pilot light that shined through a slot in the enclosure. The meter was inserted in the B+ line to some of the tubes, so that as the AVC voltage increased due to a strong signal, the plate current would decrease, causing the meter vane to deflect. The vane in the light beam throws a shadow onto the partially opaque plastic screen at the front of the device. The size of the shadow varies, depending on the deflection angle of the vane, in a manner proportional to the strength of the signal of the station tuned in. Alfred Ghirardi's 1935 *Modern Radio Servicing* has a rather thorough explanation of Shadowgraphs and how to repair them (p. 482-485). Ghirardi's book is one of the best books you can own if you regularly service radios prior to the mid-1930s.

In some Philcos, a resistor shunts the shadow meter coil, and the size of this resistor determines how much the meter swings. Usually this resistor is between 500 and 3,000 ohms. If the meter deflection is too large or too small, the size of this resistor can be varied accordingly.

The Shadowgraph in my Philco was defective. The Shadowgraph coil is in series with the B+ lead to the RF and converter tubes. After I had recapped the radio and found that it was inoperative, I began checking plate voltages. I discovered that these two tubes had no plate voltage, whereas the other tubes did. The obvious thing to check was the Shadowgraph. Sure enough, it had an open winding.

I suppose it might have been possible to pry open the metal box that holds the Shadowgraph coil and rewind the coil, but that struck me as difficult. I had a better approach. Several years ago I found a NOS Shadowgraph in a MAARC flea market for about $5 and I bought it, figuring that someday I might have a need for it. It had been sitting on the shelf gathering dust, and this seemed like the perfect opportunity to use it.

There was more than one version of the Shadowgraph. The Shadowgraph specified for the Philco 118 in the parts list accompanying the schematic was part number 6497, and according to the schematic, it should have been shunted by a 2,900-ohm resistor. The actual Shadowgraph I found in my radio was part number 5054, and it was *not* shunted by a resistor. It seems quite possible that a previous serviceman had replaced the original Shadowgraph and removed the

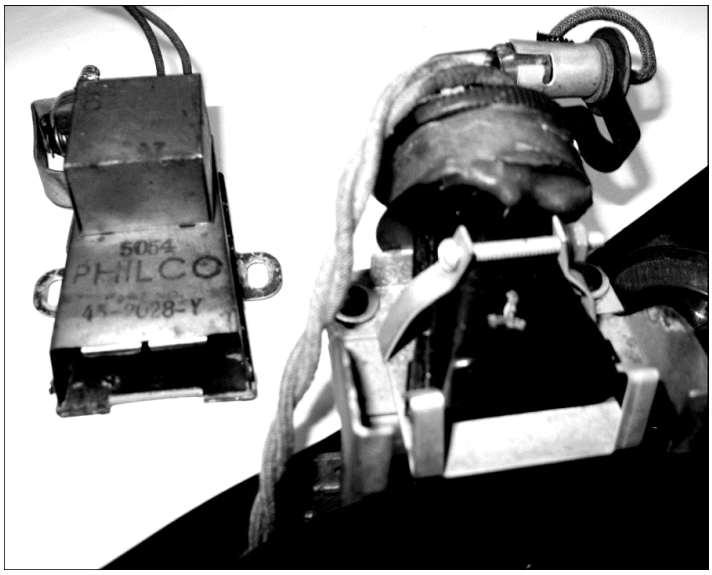

Figure 7 - The original Shadowgraph (left) and the NOS Philco replacement part that I used.

resistor to achieve the desired deflection sensitivity. It is also possible that part way through the production, Philco changed the type of Shadowgraph used. Philco did a lot of that.

The replacement Shadowgraph I installed was part number 45-2028. It looked quite different from the one that had been in the radio, but fit OK (see figure 7 above). I found a 1936 Philco parts catalog which stated that the type 6497 was for radios in which the AVC control tubes draw 10.5 ma. The type 45-2028 is for sets drawing 8 ma. In this radio, the 78 and 6A7, at the plate voltages they operate at (~200), together should not draw more than 8 ma., so the replacement Shadowgraph should not be overstressed.

The adjustment instructions that came with the NOS Shadowgraph said,

Turn on radio set and disconnect aerial. Move adjustable coil backward or forward to obtain satisfactory <u>*maximum*</u> *shadow width. It may be necessary to bend pilot lamp bracket to obtain correct centering. Remove rectifier tube* [they must mean the detector tube—not the 80] *and rotate adjustable coil to desired minimum width. On some sets an average setting of maximum and minimum may be necessary for satisfactory tuning indication.*

As soon as I installed the new Shadowgraph and turned on the radio smoke began to arise from the filament wiring, so I quickly shut it off. The only thing that had changed since the last time I had turned it on (without seeing smoke) was the new Shadowgraph. A

Restoring a Philco 118 - continued on Page 11

Restoring a Philco 118 - continued from Page 10

quick inspection and some ohmmeter checks disclosed the fact that there was a short in the pilot light assembly on the replacement Shadowgraph. A rubber gasket at the bottom of the socket, around the center conductor that mates with the point of the pilot lamp, had hardened and crumbled, resulting in the short. I made a new one by carefully carving a small rubber grommet with an Exacto knife. After rebuilding the pilot light socket, no more smoke.

The replacement Shadowgraph worked fine without a shunting resistor and deflected appropriately when a strong station was tuned in.

The next problem was that near the top end of the broadcast band the radio began to oscillate at a low frequency, similar to the motorboating caused by a bad filter capacitor. A few quick checks revealed that the oscillation arose somewhere in the converter or RF stage. Knowing that lead dress can sometimes cause this, I began to wiggle wires with my needle nose pliers and found that I could alter the oscillation when I moved the wires going to the band switch. Because the replacement band switch was physically larger than the original, I had had to lengthen some of the wires connected to it. I redid some of the wiring, making sure that the wires to the band switch were as short and direct as possible, and that cleared up the oscillation.

After a re-alignment, this Philco played quite well. In fact, it picked up the strong local stations with fairly good listening volume *without an antenna connected to the antenna termina*l.

I found two obvious mistakes in the schematic:

1. A dot is missing where the lines from screen grids of the 78 RF tube and the 78 IF tube cross the connection to grids 3 and 5 of the 6A7. Without that connection, the screens of the 78s would have no voltage.

2. The screen grid of the type 42 tube driving the push-pull 42s in the output stage has no way to get its screen voltage. Pins 2 and 3 should be connected together. (And they actually were in the radio.)

The last two radios I have worked on had errors in their schematics. Don't assume that the schematic provided by the manufacturer is correct.

Like many Philco chassis of this era, this one rested on triangular rubber bumpers in each corner so that the tuning dial would be at the right height to show through the dial escutcheon. The original rubber bumpers had crumbled. Fortunately, exact replacements are available. Check Ed Schutz's fabulous website (www.renovatedradios.com), which lists an incredible variety of antique radio parts, including all sorts of specialized rubber bumpers and grommets, including these Philco chassis supports. He also offers replacements for the rubber mask that goes between the Shadowgraph and the front of the cabinet, and I purchased one of those, too.

With a type 78 RF tube ahead of the 6A7 converter and with push-pull 42s in the audio output, this radio performs well. Philco did not add unnecessary tubes just to increase the tube count like some manufacturers did. All of the tubes in the 118 perform useful functions.

The same chassis in a console cabinet with a 12-inch speaker would have sounded even better, but as is, it has good sound and picks up lots of stations. Too bad there isn't more programming available on the AM band today like that available in 1935 when this Philco was brand new. Rather than listen to the local Chinese language AM station, I'll just have to fire up my wireless AM broadcaster and play some Fibber McGee and Molly cassette tapes through my Philco 118. (30)

WARCI Needs You!

If you would like to become more active in WARCI, please step up! Organizations like WARCI depend upon volunteers for their success. Areas where you can help include:

Public relations.

Providing radio services such as repair / restoration.

Contribute newsletter articles or information from which an article can be written.

Contribute items for the WARCI website – such as photos of your Wisconsin-made radios to add to our gallery.

Help us plan and implement the future auction.

Give us your ideas on how we can make WARCI better for you!

The Continuing Adventures of Bearl E. Colburn— The Yar True-Tone Speaker

By Greg Hunolt

This article is the promised follow-up to the article on inventor Bearl Elmer Colburn and the Super-Ball Antenna Company of Green Bay, Wisconsin, that appeared in the May 2010 issue of WARCI News. That article described Mr. Colburn's adventures in the second half of the 1920's with the Super-Ball antenna and its competing cousins. It mentioned briefly that Mr. Colburn also developed designs for two radio speakers, the topic of this article. The principal one was the "Yar True-Tone" speaker, shown in figure 1 on the first page, that was distributed by Yahr-Lange, Inc., the wholesale drug emporium of Milwaukee, who were the distributor for the Super-Ball antenna and other devices made by the Super-Ball Antenna Company. See the May article for more information on the relationship between Mr. Colburn and the Super-Ball Antenna Company and Yahr-Lange, Inc.

Colburn's First Speaker

On January 8, 1927, Mr. Colburn applied for a patent on a "Loud Speaker", and the patent (number 1,704,460) was granted on March 5, 1929, and assigned to the Super-Ball Antenna Company of Green Bay, Wisconsin (recall that Mr. Colburn was an officer of Super-Ball Antenna). This patent covered a table-top speaker that featured a folded horn design that allowed a "very long air column" in a compact, self-contained device with a cabinet and horn projecting from its top. The patent discusses in detail how the sound would proceed from the reproducer through the chambers of the folded horn and eventually out the final top-mounted section of the horn. See figures 2 and 3 for diagrams of the speaker included in the patent application. I have not seen anywhere else any mention or advertisement of this speaker; I do not know if it was ever actually manufactured. If a reader has or has seen an example or any word of this speaker, please contact me!

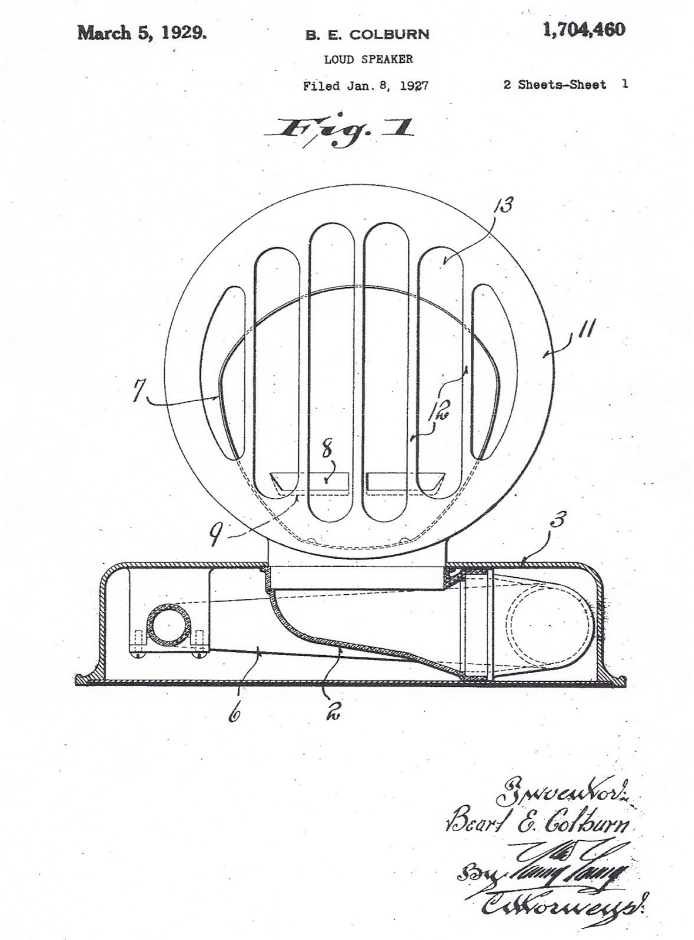

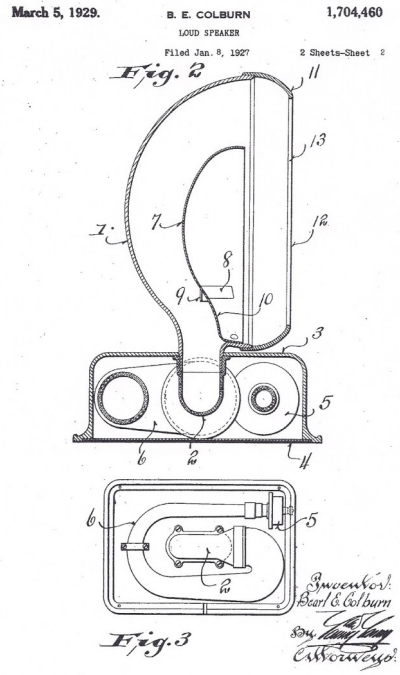

Figure 2 - Upper Right, Front View of Colburn Loudspeaker

Figure 3 - Lower Right: Side and Base View of Colburn Loudspeaker

Yar True-Tone Speaker - continued on Page 13

Yar True-Tone Speaker - continued from Page 12

The Yar True-Tone Speaker

Mr. Colburn applied for a second speaker patent on August 31, 1927, a design patent for a "Design for a Loud Speaker", which was granted on January 3, 1928, and assigned to the Super-Ball Antenna Co., Inc., of Green Bay Wisconsin. The application states that Mr. Colburn has "invented a new, original, and ornamental Design for a Loud Speaker" as described by the diagrams included in the application, see figure 4. The patent was a design patent for the speaker housing only.

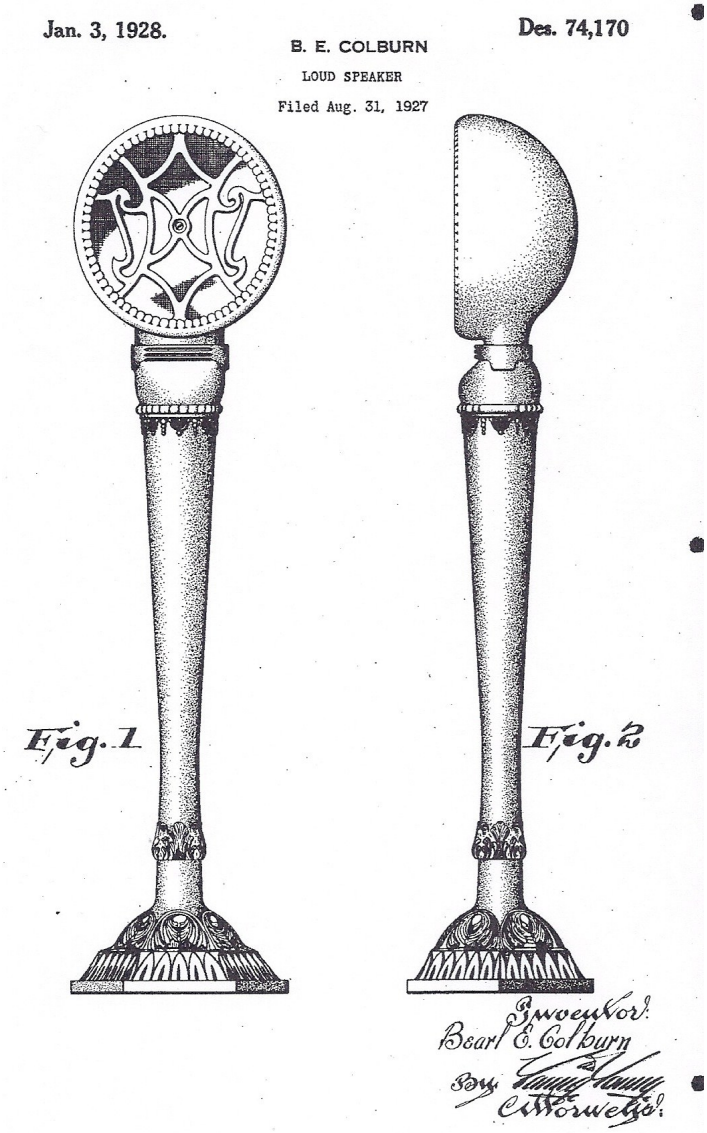

Figure 4 - Patent Drawing for Yar True-Tone Speaker

The speaker was marketed by Yahr-Lange, Inc., as the "Yar True-Tone Floor Speaker". A short article (without an illustration) appeared in the Sunday Sentinel and Milwaukee Telegram for Sunday, October 16, 1927, headlined "Yahr-Lange Introduce New Model Speakers". The article begins "Fred E. Yahr, president of Yahr-Lange, Inc., manufacturers and distributors of the Super-Ball Antenna, announces a new radio speaker, the product of the Super-Ball engineers. It is known as the "Yar True Tone Speaker". Following a description of the speaker that parallels the patent application described above, the article concludes by saying "The Yar True-Tone Speaker was first introduced to the radio trade at the R.M.A. trade show, Chicago, and met with an enthusiastic reception by dealers and distributors."

Floyd Paul in his note on the Yar True-Tone speaker in the June 1986 issue of the AWA Old Timers' Bulletin mentions that the first ad by Yahr-Lange appeared in September, 1927, and that ads appeared in several magazines including Citizens Radio Call Book and Popular Radio. Figure 5 presents the Yahr-Lange ad from the September, 1927 issue of Citizens Radio Call Book. The ad notes that the True-Tone Speaker "will handle 200 volts without oscillation or 'blasting'"; the 200 volts must refer to the DC B+ plate voltage for the output AF amplifier stage which the plate circuit including the speaker would carry along with the actual AC output audio signal.

The November, 1927 issue of Citizens Radio Call Book contained a Yahr-Lange, Inc. ad, shown in figure 6 on the next page, that featured the True-Tone Speaker as well as the Super-Ball Antenna.

I have not found any subsequent ads for the speaker (or any at all in the issues of Popular Radio that I have) which leads me to suspect that the speaker was only made for a short period in 1927, or perhaps a year or so.

The Yahr True-Tone speaker was described in Popular Radio, January 1928, in a short 'What's New in Radio' article titled "A Horn-Type Reproducer of Unusual Appearance". The article notes that "This reproducer is of the horn type and is of heavy metal construction, but so designed that there is no metallic or harsh tone evident in the reproduction. The reproducer unit is enclosed in the base of the device and the long, tapering pedestal, as well as the belled top, serves as the horn. The whole unit stands about 40 inches high. The heavy metal construction prevents the reproducer from being tipped over easily. The finish is a warm antique bronze and the distinctive appearance of the unit makes it a pleasing addition to the furniture of the

Yar True-Tone Speaker - continued on Page 14

Yar True-Tone Speaker - continued from Page 13

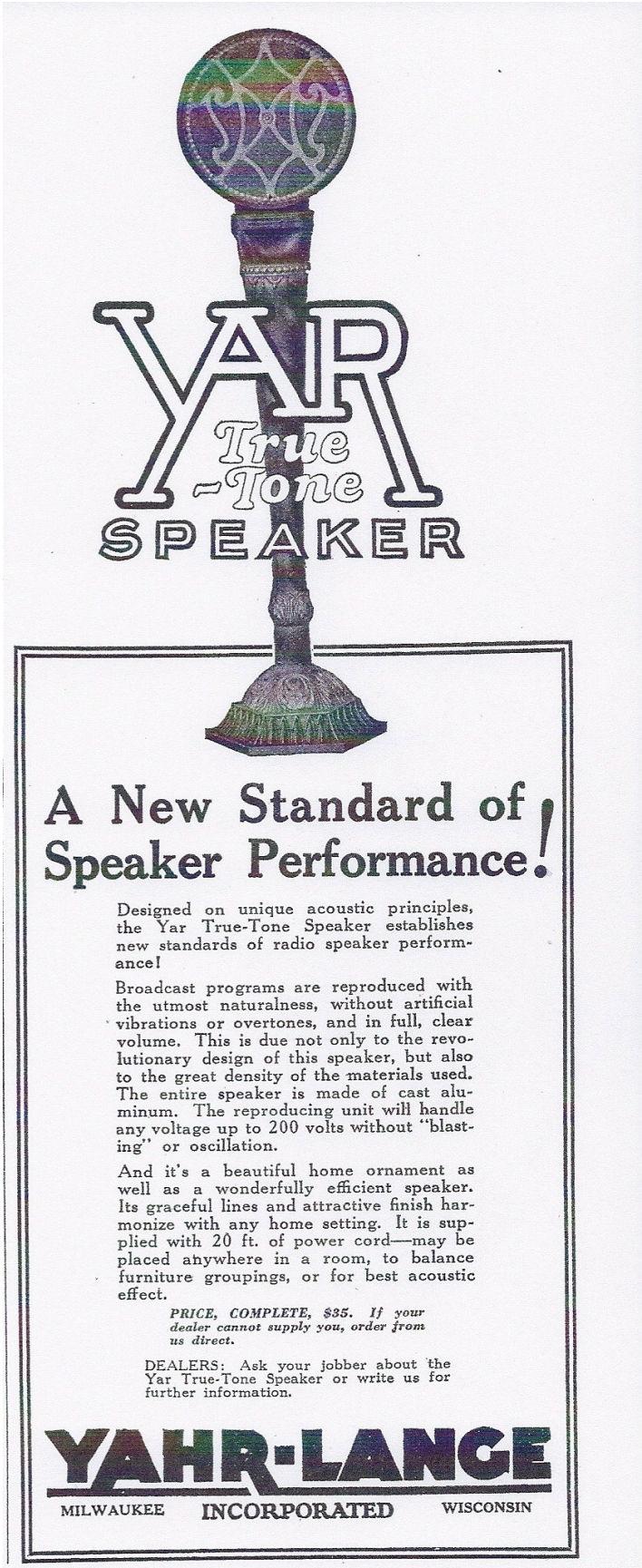

Figure 5 - Citizens Radio Call Book, September 1927, page 229.

Figure 6 - Citizens Radio Call Book, November1927, page 179.

Yar True-Tone Speaker - continued on Page 15

home." The 'heavy metal' was cast aluminum, in four pieces (base, pedestal, head, and face with grille). See figure 7 below for a picture of the speaker that appeared with this article. The maker of the True-Tone speaker was given as Yahr-Lange, Inc.

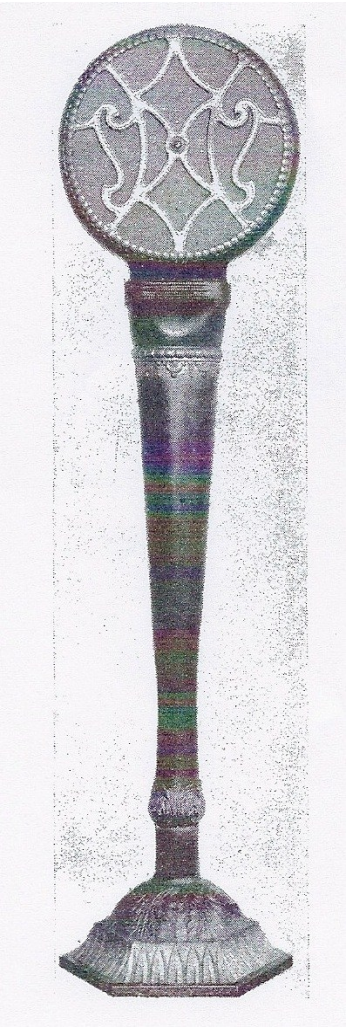

Buford Chidester was kind enough to send me photos of his Yar True-Tone speaker, and with his permission his photos and notes are presented below. Buford reports that the speaker performs very well, providing "beautiful, wonderful sound", and is one of the speakers in his large collection that he most enjoys demonstrating.

Figure 1 on page 1 provides overall front and side views of Buford's 40 inch + tall Yar True-Tone speaker. His speaker is the "warm antique bronze", but Buford notes that the speaker was also finished in green and gold. I would note that green and gold are the colors of the Green Bay Packers football team that had begun play in 1921, six years before the introduction of the Yar True-Tone Speaker.

Figure 8 is a close up showing the design of the face of the speaker, grille work and frame that fits onto the head without screws. The design of the grille can be compared with the patent drawing in figure 3 above.

Figure 8 - Face of Buford's Yar True-Tone Speaker

Figure 9 presents a side view of the head of the speaker. Buford notes that his speaker is missing a nametag that should have been on the back of the head by the screw that holds the head on the pedestal. Figure 10 shows the head of the speaker with the face removed to reveal the internal baffle structure.

Figure 9 - Side of Head, *Figure 10 - Open Face*

Figure 11 is a close-up of the base of the speaker, showing the decorative design.

Figure 11 – Decorative Base of Buford's Yar True-Tone

Figure 12 on the next page is a bottom view of the base, showing the driver. Buford notes that the driver is a Baldwin unit that screws onto the base.

Yar True-Tone Speaker - continued on Page 16

Yar True-Tone Speaker - continued from Page 15

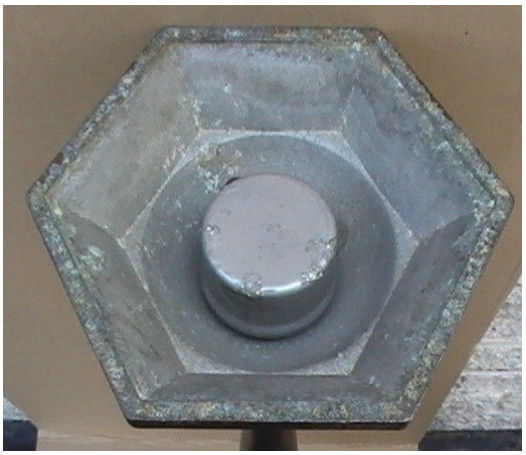

Figure 12 - Bottom View of Base, Showing Driver

See also the photograph of the Yahr True-Tone Speaker in Buford and Jane Chidester's great study, "Classic Cones", page 119. The speaker also appears in Floyd Paul's "Radio Horn Speaker Encyclopedia", page 60.

As I noted in the May article, Bearl Colburn was a practical inventor, with a true flair for design revealed by his drawings of the Yahr True-Tone Speaker and later non-radio inventions.

Acknowledgments

In addition to the acknowledgments I offered in the preceding article, I would like to again express great appreciation to Buford Chidester who gave me permission to include photos of his Yar True-Tone speaker in this article.

As always, I would welcome and appreciate any corrections, additions, or comments, that any of you might wish to make. I would especially appreciate hearing from anyone who has a Yar True-Tone speaker, and I'd be grateful for photos including a photo of the paper logo on the back of the head of the speaker. Please send them to me at ghunolt@excel.net.

References:

1. "A Horn-Type Reproducer of Unusual Appearance", Popular Radio, January 1928, p 55.

2. "Yahr-Lange Introduce New Model Speakers", Milwaukee Sunday Sentinel and Milwaukee Telegram, October 16, 1927.

3. "Classic Cones", Buford and Jane Chidester, Sonoram, 2001, p 119.

4. "Radio Horn Speaker Encyclopedia", Floyd Paul, All-in-One Printing, 1986, p 60.

5. "A Unique Style Floor Pedastal Horn Speaker", The Loudspeaker column, edited by Floyd Paul, AWA Old Timers Bulletin, Volume 27 No. 1, June 1986.

Figures

1. Yar True-Tone Speaker, Front and Side Views, kindly provided by Buford Chidester.

2. Loud Speaker Drawing, U. S. Patent #1,704,460; United States Patent Office.

3. Loud Speaker Drawing, U. S. Patent #1,704,460; United States Patent Office.

4. Yar True-Tone Speaker Drawing, U.S. Design Patent #74,170; United States Patent Office.

5. "A Horn-Type Speaker of Unusual Appearance", Popular Radio, January 1928, p55.

6. Yahr-Lange ad, Citizens Radio Callbook, September 1927, p229.

7. Yahr-Lange ad, Citizens Radio Callbook, November 1927, p179.

8. – 12. Photographs of a Yar True-Tone Speaker kindly provided by Buford Chidester.

WARCI Radio Services

We now have a list of WARCI members who would be willing to provide repair / restoration services, advice or research for folks who contact WARCI looking for help. If you would like to be added to the list, please let me or one of the Board members know.

Name	Email	Telephone	Service Available
Dwight Church	(none)	414-545-6972	Radio repair – electronics only.
Bill Engaas	craftyradio@earthlink.net	262-786-8183	Speaker Repair.
Ralph Larsen	radioralph@hotmail.com	414-278-7981	Repair, including Television.
Mike Lewis	deepheart@att.net	608-835-7193	Repair, restoration, training.
Dave Milke	wb9egz@gmail.com	608-838-9661	Parts, tubes, and free advice.
Greg Hunolt	ghunolt@excel.net	920-893-0422	Research, especially on 1920's radios.

Odd Bits

Send in your odd story about strange doings in the world of radio collecting, or weird items from old radio magazines.

A New Super-Beer-O-Dyne

Washington D.C. March 10, 1928.

Radio Commissioner Harold A. La Fount was present at a demonstration of a radio set which, he says, might revolutionize the industry if it were put on the market.

It was at a boosters' meeting in Los Angeles. On the platform was an exceedingly large cabinet, with three dials on it.

"What would you like me to pick up?" asked the demonstrator, "Japan?"

He twiddled the dials and in came Japanese music, shortly followed by an announcement in Japanese.

"Now what'll you have?", he asked. "China?"

Again the dials were manipulated, and Chinese music flooded the place.

The next change of the dials brought in a speaker talking in German.

"Ah! Germany!" exclaimed the demonstrator.

It seemed that the German station was expounding the virtues of good beer. At the conclusion of the talk, listeners were invited to step up to the loudspeaker for a sample.

"Ah! Beer by radio!", exclaimed the demonstrator. "That's the kind of set to have." The demonstrator obtained a cup.

"Now I'm going to send some of this beer out to you by radio," said the German voice. "Hold your cups under the loud speaker".

The demonstrator did so and he was rewarded.

This was too much for La Fount's credulity. He investigated, and discovered a phonograph under the stage which had furnished the music. A small rubber pipe in the speaker had provided the beer.

[Milwaukee Sunday Sentinel Radiologue, March 11, 1928]

News from the Neighboring Clubs

ARCI

Antique Radio Club of Illinois
www.antique-radios.org

Radiofest 2011

August 4-5-6

Willowbrook Holiday Inn
7800 S. Kingery Hwy (Rte 83)
Willowbrook, IL

Thursday: 4:00-6:00 Pre-registration
6:30 Main Auction
Friday: All-Day Flea Market, Programs
Old Equipment Contest
6:00-9:00 Banquet
Saturday: 7:00-12:00 Flea Market
9:30 Donation Auction

MARC

Michigan Antique Radio Club
www.michiganantiqueradio.org

Extravaganza '11

July 7, 8 and 9, 2011

Causeway Bay Hotel
6820 South Cedar Street
Lansing MI

Thursday: 1:00 Tube Collectors Association
Friday: All-Day Flea Market, Programs
Old Equipment Contest
7:30 - 10:00 "Radio Reception"
Saturday: AM Flea Market, Auction Check-In, Program
1:30 Main Auction

Radiofest Programs

Friday:

10:00 - 11:00 *Tube Audio Panel Discussion,* Karl Johnson, Pete Nauseda, and Terry Shaver

11:00 - 12:00 *Vacuum Tube Numbering Systems, US and Europe,* Bob Dobush

12:00 - 1:15 *Ham Radio Forum,* Bill Ross W9WR

1:30 - 2:30 *The Process of Broadcasting*, Al Germond

2:30 - 3:30 *Seeing Sound*, Bret Menassa

3:30 - 4:30 *Chicago Experimental Television*, Steve Jajkowski

Special Display - *Amateur Radio from Spark to Solid State*

The Banquet features *"The Wise Guys"* - relive the fun of early morning radio from the 30s and 40s.

Extravaganza Programs

Thursday:

8:00PM - *The Hallicrafters Project"*, John Reinicke

Friday:

1:00 - 2:30 *Recent Discoveries in the Tube World,* Ludwell Sibley

3:00 - 4:00 *Hints and Kinks,* Mark Oppat

Saturday:

10:00 - 11:00 *How to Hook Up and Enjoy Early Battery Sets*, Dave Snow

The "Radio Reception" features live entertainment by *"The Royal Garden Trio".*

Meet closes late Saturday afternoon with the *"Good-Buy Affair",* the bargain auction.

Scenes from the May 8, 2011 Swap Meet

Dale Boyce and Barry Janov on a fine Spring morning.

Dawn and Patrick Kondreck selling some audio.

Ball Antennae and Speakers for Show and Tell

Activity in the flea market.

Karl Johnson and Pete, Nauseda ready to deal.

An Arvin enjoys the May sunshine!

Classified Ads

HELP NEEDED: Would like to contact owners of 1920's battery sets, literature, and equipment made by Globe Electric Company of Milwaukee, WI, to survey existing model types and variations for development of a company history. All responses will be kept confidential. Thanks.
Glenn Trischan, P.O. Box 240022, Milwaukee, WI 53224. E-mail: gnets142@att.net.

WANTED: Any set made in Plymouth, WI, by the Plymouth Radio and Phonograph Co.
Greg Hunolt, N5412 State Hwy 57, Plymouth, WI 53073, Email ghunolt@excel.net or 920-893-0422.

SERVICE: Michael Lewis – Radio Repair / Restoration and Training. You can hire me to restore your antique radio, but why not hire me to teach you to do it yourself? I've been teaching people how to electronically restore antique radios for over 30 years. I've assembled an incredible supply of parts, literature, and test equipment over more than 40 years. With two long-term students already, I've recently retired from my day job to devote full time to my antique radio restoration business. Whether you need just one session for some help on a "tough dog" or want to learn over the long term how to restore radios, I'm available through the end of 2010 at an introductory rate of $15/hour, and able to make available to you the facilities described below.

At your command: test equipment including digital and analog multi-meters, high and low voltage bench power supplies, AF and RF generators, and much more. Also a large stock of parts including 50,000 vacuum tubes, and a comprehensive technical library spanning the 1920's-1980's, including the Riders and Gernsback manuals, and Sams Photofacts, and various factory manuals.

Michael Lewis, 6070 County Road D, Oregon, WI 53575, Phone: 608-835-7193, Email: deepheart@att.net

WANTED: DeForest Plug-In Butterfly Coils – Terry Hanney, 414-545-6425

Remember that classified ads up to about ¼ page are free to WARCI members.

The cut-off date for all newsletter material is about the 15th of the month preceding publication of the next newsletter (e.g. August15 for the September issue). Send ads by email or letter to Greg Hunolt, WARCI News, at ghunolt@excel.net or N5412 State Hwy 57, Plymouth WI, 53073.